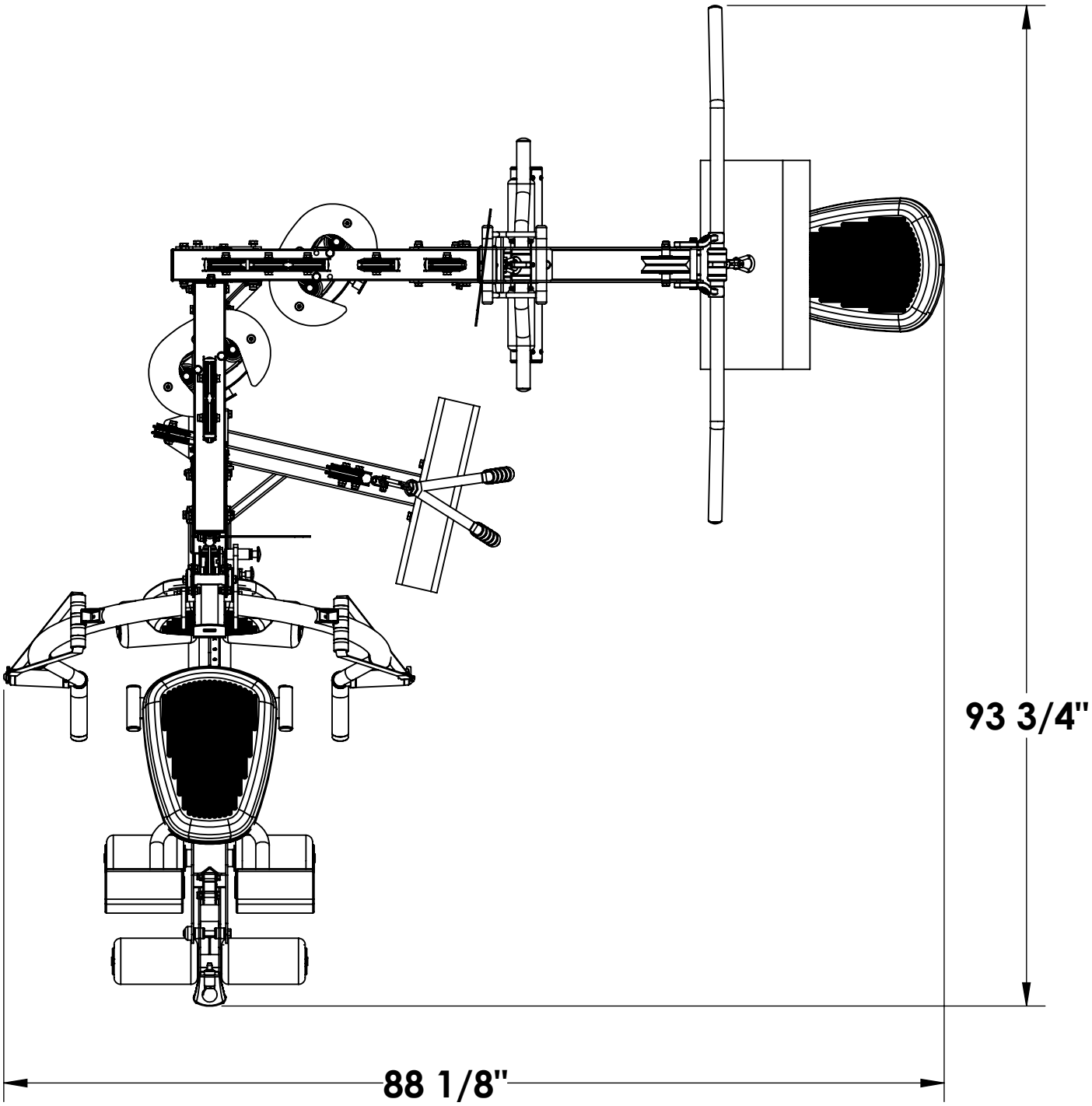
93 3/4"
88 1/8"

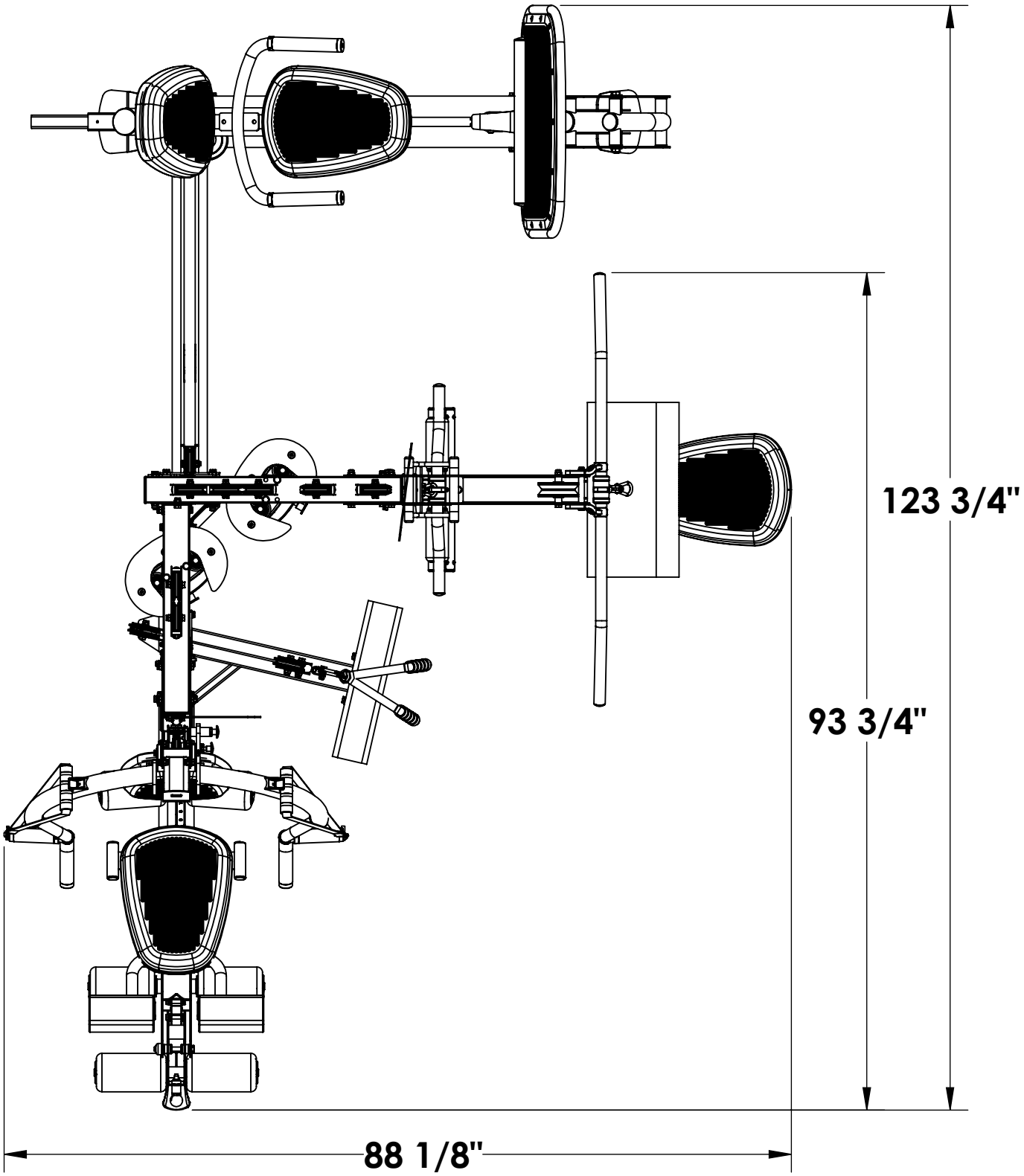
123 3/4"
93 3/4"
88 1/8"